the toolmaker

GOVONI®

AUTOMATIC TYRE CHANGER **WITH TILTING COLUMN**

GO3100

- CARS
- LIGHT COMMERCIAL VEHICLES
- 4X4 VEHICLES



Professional automatic tyre changer.

Designed to service all types of passenger car, light commercial vehicle and 4x4 wheels. It ensures maximum safety during tyre mounting and demounting operations, protecting both the wheel rim and tyre from damage.

Art. **EXPORT 07-26 REV 00**
Reproduction permitted only with prior authorisation.

AUTOMATIC TYRE CHANGER

GO3100

FOR MOUNTING AND DEMOUNTING TYRES ON PASSENGER CARS, LIGHT COMMERCIAL VEHICLES AND 4X4s.

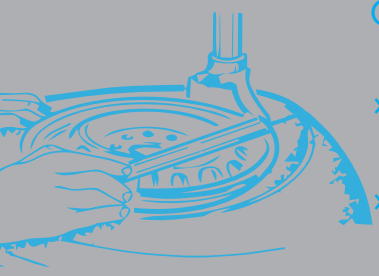

- Speeds up tyre mounting and demounting, reducing service time
- Protects alloy and steel rims thanks to jaw and mounting head protectors
- High bead breaker force for difficult tyres
- Easy pedal-operated controls
- Greater precision and operational safety
- Suitable for a wide range of wheel diameters
- Ideal for continuous professional use

FEATURES

Stability

The wide, reinforced chassis is designed to provide maximum structural rigidity and exceptional spindle stability throughout all operating stages.

Heavy-Duty Turntable with Innovative Design

High-strength steel clamping jaws, fitted with scratch-resistant protective inserts, ensure a secure grip without marking or damaging the wheel rims.

Bead Breaker

The double-acting bead breaker cylinder delivers high bead breaking force, even on difficult tyres.

The bead breaker blade is fitted with a protective plastic insert to prevent damage to wheel rims.

Integrated Storage Tray

Built into the side column, the storage tray keeps the work area tidy and organised.

The integrated pressure gauge allows quick and accurate tyre pressure monitoring.

Inflation System

Pedal-operated inflation system complete with pressure gauge and quick inflation valve.

The Tubeless Inflation System, delivers an instant, high-volume air blast for fast and reliable tubeless tyre seating.

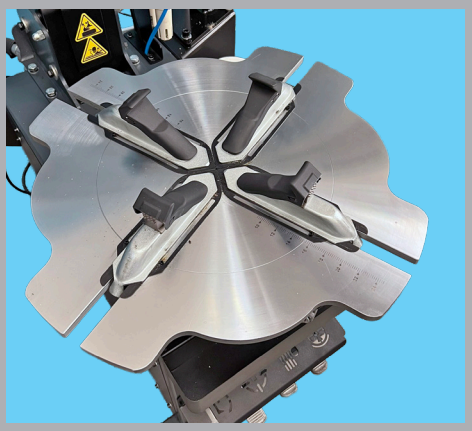





...just blue, just perfect!

the toolmaker

GOVONI®

GO3100

INTEGRATED.SAFETY.SYSTEMS

01

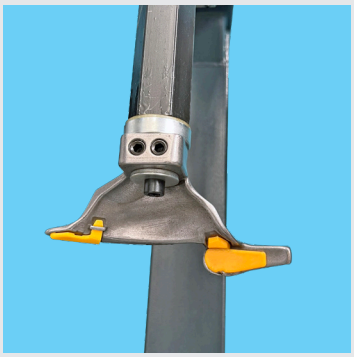

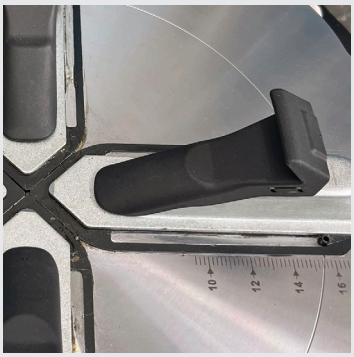



Protection.

Protective components prevent damage to both wheel rims and tyres

02

Fast Inflation.

Quick inflation system for increased workshop efficiency

03

Structure.

Heavy-duty reinforced construction designed for intensive professional use

STANDARD.EQUIPMENT

Tyre lever

Tyre pressure gauge

Two-speed pedal-controlled turntable

Protective covers for jaws, mounting head and bead breaker blade

Pneumatic helper arm for run-flat and low-profile tyres

Air filter/lubricator unit with integrated pressure regulator

APPLICATIONS

RECOMMENDED FOR:

- Seasonal tyre changes
- Premium tyre service centres
- Sports and low-profile tyre fitting
- High-productivity professional workshops

COMPATIBLE WITH:

- Passenger car tyres, SUV tyres
- Steel wheels
- Alloy wheels
- Low-profile tyres
- Tubeless tyres
- Large-diameter wheels
- Light commercial vehicles, 4x4s and off-road vehicles

QUALITY CONTROL:

- Each machine is individually tested before shipment.

...just blue, just perfect!

GO3100

DIMENSIONS

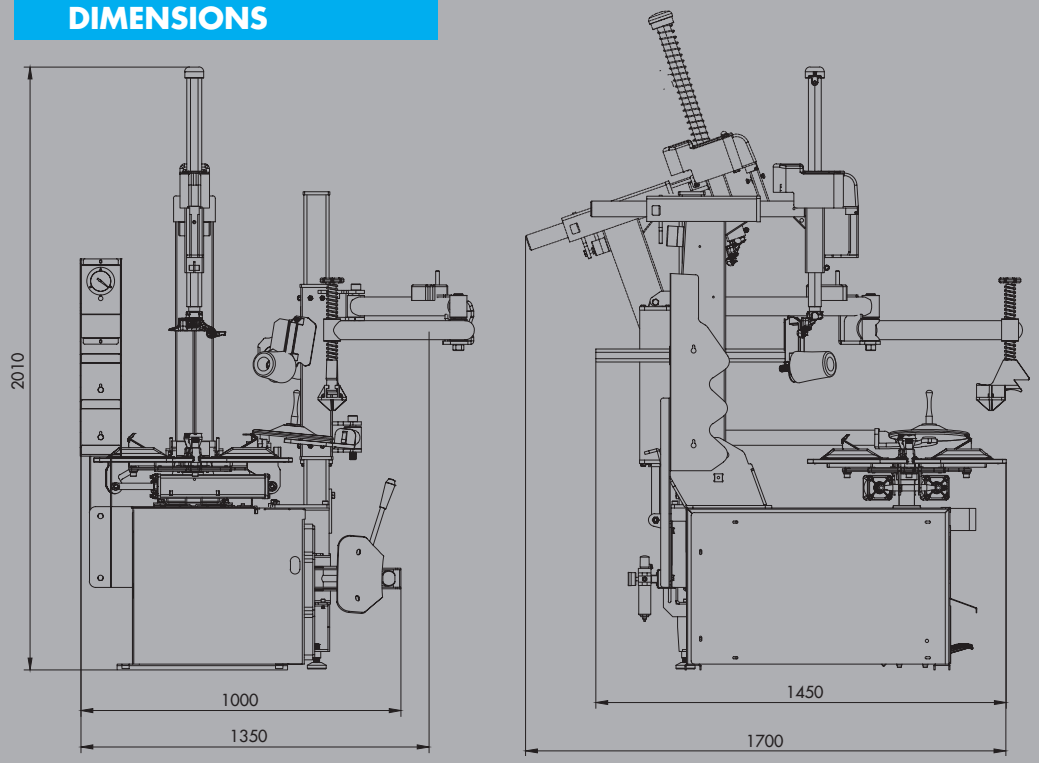

PACKING

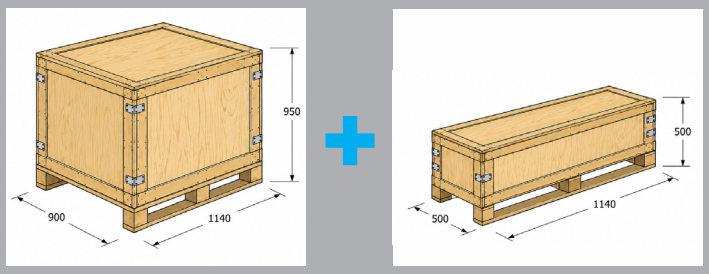

Gross weight	**380 kg**
Net weight	**340 kg**

TECHNICAL DATA

External rim clamping	**10" – 22"**
Internal rim clamping	**12" – 24"**
Maximum tyre width	**13"**
Maximum wheel diameter	**1000 mm (39")**
Operating pressure	**8/10 bar**
Maximum inflation pressure	**3,5 bar**
Power supply	**380 V – Three-phase**
Motor power	**0,75 / 1,1 kW**
Turntable speed	**7/14 rpm**
Bead breaker force	**2500 kg**
Noise level	**< 75 dB(A)**

© Copyright 2001-2026 | All rights reserved - **GOVONI Srl**

The technical data and illustrations contained in this brochure are provided for guidance only and are not binding. As part of our continuous product improvement programme, specifications may be subject to change without prior notice. Consequently, delivered products may differ from those illustrated or described.

GOVONI SRL

Via degli Orsi, n. 97
40014 Loc. Beni Comunali |
Crevalcore (BO) Italy

Phone
(+39) 051.982688
(+39).051.980798

E-mail
info@govoni.it

Web
www.govoni.it